# Cleandrive Postitive Drive Belts
# CD.P25-A-MC+M

**Main industry segments**
Bread, Candy, Chocolate, Dairy (incl. cheese), Frozen food, Fruit, Pizza, Poultry, Ready meals, Red meat, Seafood, Vegetables

**Applications**
Food processing/conveying belt

**Special features**
Abrasion resistant on both sides, Bi-directional suitable, Detectable by metal detectors, X-Ray detectable

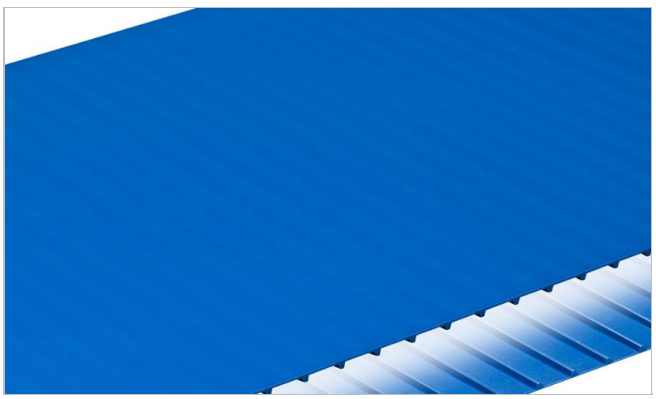

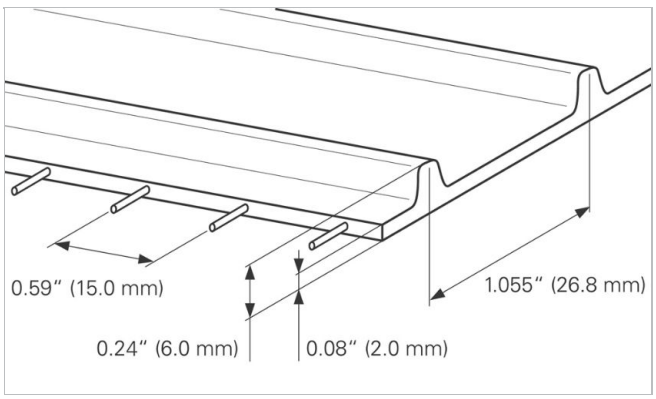


| Product Construction / Design | |
|---|---|
| Material | Thermoplastic polyurethane (TPU) |
| Farve | Cobalt blue |
| Conveying side surface | Matt |
| Conveying side property | Medium-adhesive |
| Traction layer (material) | Aramid cords |
| Pulley side surface | Glossy |
| Pulley side geometry | Drive bars |

| Product characteristics | |
|---|---|
| Antistatically equipped | No |
| Slider bed suitable | Yes |
| Carrying rollers suitable | No |
| UV-C suitable | No |
| Laser markable | No |
| Flammability | No specific flammability prevention property |
| Food suitability, EU conformance | Yes - Check Document of Compliance (DoC) in our Portal |
| Food suitability, FDA conformance | Yes - Check Document of Compliance (DoC) in our Portal |
| Halal certified | Yes |
| Other conformance/approval | Japanese Food Regulation (MHLW Notification No. 370) |

# Cleandrive Postitive Drive Belts
# CD.P25-A-MC+M

| Technical data | | | | |
|---|---|---|---|---|
| Hardness | 95 | Shore A | | |
| Thickness of belt | 2.0 | mm | *0.079* | *tommer* |
| Distance between cords | 15 | mm | *0.59* | *tommer* |
| Nominal drive bar pitch | 26.8 | mm | *1.055* | *tommer* |
| Mass of belt (belt weight) | 3.1 | kg/m² | *0.635* | *lb/sqft* |
| Min. operating temperature admissible (continuous) | -20 | °C | *-4* | *°F* |
| Max. operating temperature admissible (continuous) | 80 | °C | *176* | *°F* |
| Coefficient of friction (pulley side / PE sliding support) | 0.40 | - | | |
| Minimal width of belt | 150 | mm | *6* | *tommer* |
| Seamless manufacturing width | 609 | mm | *23.98* | *tommer* |

### Joining related properties

| Joining method | |
|---|---|
| Quickmelt | Master joining method for standard applications |
| Mechanical Lace (SS Rod) | Optional joining method |
| Mechanical Lace (POM Rod) | Optional joining method |

Link to JDS:

| Joining method | | Quickmelt | Mechanical Lace (SS Rod) | Mechanical Lace (POM Rod) |
|---|---|---|---|---|
| Minimal pitch diameter for driving sprockets | mm<br>*tommer* | 60.1<br>*2.37* | 60.1<br>*2.37* | 60.1<br>*2.37* |
| Minimal pitch diameter for idling sprockets | mm<br>*tommer* | 43.0<br>*1.69* | 43.0<br>*1.69* | 43.0<br>*1.69* |
| Minimal back-bending roller diameter for center drive configuration | mm<br>*tommer* | 75<br>*3* | 75<br>*3* | 75<br>*3* |
| Minimal diameter for belt support roller | mm<br>*tommer* | 50<br>*2* | 50<br>*2* | 50<br>*2* |
| Admissible tensile force per unit of width | N/mm<br>*lbf/in* | 6.0<br>*34* | 3.0<br>*17* | 1.8<br>*10* |
| Troughed installation suitable | | Yes | No | No |
| X-Ray / Metal detectable material | | Yes | Yes | Yes |
| Designed for metal detector transparency | | No | No | No |

*All data are approximate values under standard climatic conditions: 23°C/73°F, 50% relative humidity (DIN 50005/ISO 554). Limited representative testing based on a standard configuration is carried out to estimate minimum pulley diameters. Please contact Habasit for specific guidance regarding non-standard applications, including, but not exclusively, when profiles or cleats are used, or if the belt working temperature is close to the limits listed in this document.*

### Chemical resistance
Link til informasjon om kemisk resistens https:/rims.habasit.com

### Calculations
Please ask your local Habasit partner to calculate your needs for you and receive the best advise specially suited for your application.

# Cleandrive Postitive Drive Belts
# CD.P25-A-MC+M

**Recommendation**
See Engineering Manual

Store spare belts in a cool and dry place and if possible in their original packaging. Protect spare belts from sunlight/UV-radiation/dust/dirt! Check Link for Storage requirements:
"https://tdm.habasit.com/pds/en-us/Storage%20of%20Habasit%20material.pdf"

This product has not been tested according to ATEX standards (atmospheres with explosion risk - ATEX 95 regulation or EU directive 2014/34/EU) and therefore is subject to user's analysis in the respective environment



**Sprockets**
Habasit® Cleandrive series

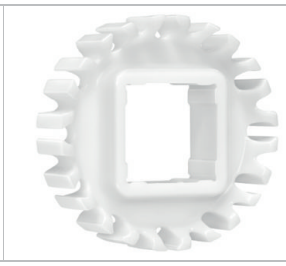

**Sprockets**
Habasit® Cleandrive HyCLEAN series

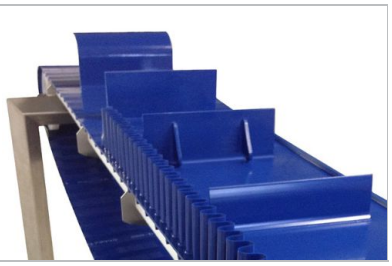

**Profiles**
Longitudinal and transversal profiles

| | |
|---|---|
| Group | Cleandrive Positive Drive<br>Cleandrive Belt Series CD25 |
| Del nummer | H950047774 |

**Ansvarsfraskrivelse**
**Ansvarsfraskrivelse for produktanvendelse (gælder for ALLE Habasit produkter og nævnt på alle produktdatablade)**
Denne ansvarsfraskrivelse gælder for Habasit og firmaer, som er tilknyttet os, samt vores chefer, ansatte, agenter og entreprenører (herefter fælles benævnt HABASIT) for de produkter som omfattes af denne tekst (herefter benævnt produkter). SIKKERHEDSADVARSLER SKAL LÆSES OMHYGGELIGT OG ALLE ANBEFALEDE SIKKERHEDSFORSKRIFTER SKAL FØLGES STRENGT! Følg advarslerne som findes i dette dokument, i Habasits kataloger og i installationsanvisninger og håndbøger. Alle indikationer og al information om applicering, anvendelse og ydelse af produktet er anbefalinger, som kan anses for værende pålidelige, men de er ingen fremstilling, garanti eller ansvarsforpligtigelse med hensyn til fuldstændighed, tolerancer eller egnethed til et bestemt formål. Denne information bygger på laboratoriearbejde med mindre testudstyr, kørt ved normaldrift, hvilket indebærer at den ikke nødvendigvis matcher produktydelsen ved industriel anvendelse. Ny viden og erfaring kan medføre modificeringer og ændringer inden for en kort periode og uden forudgående varsel.
DISSE PRODUKTER OMFATTES AF HABASITS UDTRYKTE GARANTI, SOM ER DEN ENESTE GÆLDENDE GARANTI OG ERSTATTER ALLE ANDRE EVENTUELLE GARANTIER, UDTRYKTE ELLER UNDERFORSTÅEDE. HABASIT FRASKRIVER SIG ALT ANSVAR FOR ALLE ANDRE GARANTIER, UDTRYKTE ELLER UNDERFORSTÅEDE, INKLUSIVE, DOG UDEN AT BEGRÆNSES DERTIL, UNDERFORSTÅEDE GARANTIER OM SALGBARHED, EGNETHED TIL ET BESTEMT FORMÅL, AT PRODUKTERNE IKKE STRIDER MOD NOGLE REGLER, SAMT GARANTIER SOM FØLGE AF AFTALE, ANVENDELSE ELLER HANDEL. DETTE FORBEHOLD GÆLDER I DEN UDSTRÆKNING SOM LOVEN TILLADER. DA FORUDSÆTNINGERNE FOR ANVENDELSE ER UDEN FOR HABASITS KONTROL, KAN VI IKKE TAGE NOGET ANSVAR FOR DE NÆVNTE PRODUKTERS EGNETHED ELLER PROCESTILPASNING. DETTE FORBEHOLD GÆLDER OGSÅ FOR INDIKATIONER FRA PROCESRESULTATER OG OUTPUT.