Cleandrive Postitive Drive Belts
CD.P50-A-MC+M

Main industry segments
Bread, Candy, Chocolate, Dairy (incl. cheese), Frozen food, Fruit, Pizza, Poultry, Ready meals, Red meat, Seafood, Vegetables

Applications
Food processing/conveying belt

Special features
Abrasion resistant on both sides, Bi-directional suitable, Detectable by metal detectors, X-Ray detectable

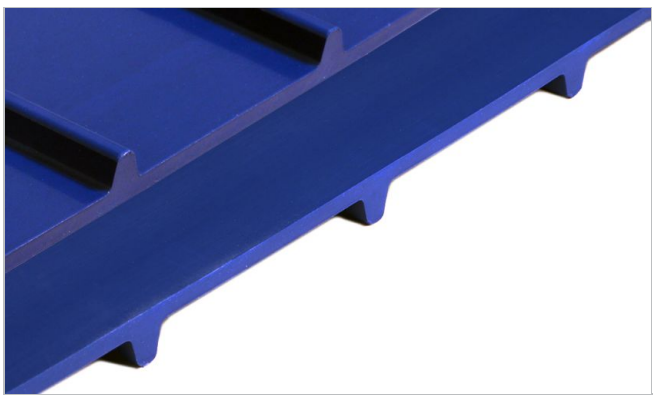

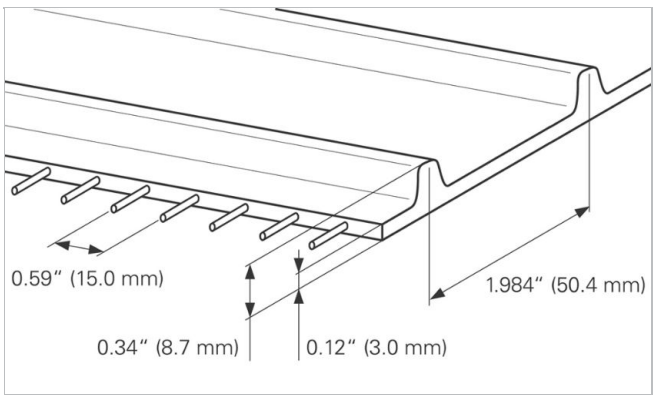

Product Construction / Design	
Material	Thermoplastic polyurethane (TPU)
Farve	Cobalt blue
Conveying side surface	Matt
Conveying side property	Medium-adhesive
Traction layer (material)	Aramid cords
Pulley side surface	Glossy
Pulley side geometry	Drive bars

Product characteristics	
Antistatically equipped	No
Slider bed suitable	Yes
Carrying rollers suitable	No
UV-C suitable	No
Laser markable	No
Flammability	No specific flammability prevention property
Food suitability, EU conformance	Yes - Check Document of Compliance (DoC) in our Portal
Food suitability, FDA conformance	Yes - Check Document of Compliance (DoC) in our Portal
Halal certified	Yes

Cleandrive Postitive Drive Belts
CD.P50-A-MC+M

Technical data				
Hardness	95	Shore A		
Thickness of belt	3.0	mm	*0.118*	*tommer*
Distance between cords	15	mm	*0.59*	*tommer*
Nominal drive bar pitch	50.4	mm	*1.984*	*tommer*
Mass of belt (belt weight)	4.6	kg/m²	*0.942*	*lb/sqft*
Min. operating temperature admissible (continuous)	-20	°C	*-4*	*°F*
Max. operating temperature admissible (continuous)	80	°C	*176*	*°F*
Coefficient of friction (pulley side / PE sliding support)	0.40	-		
Minimal width of belt	150	mm	*6*	*tommer*
Seamless manufacturing width	609	mm	*23.98*	*tommer*

Joining related properties

Joining method	
Quickmelt	Master joining method for standard applications
Mechanical Lace (SS Rod)	Optional joining method
Mechanical Lace (POM Rod)	Optional joining method

Link to JDS:

Joining method		Quickmelt	Mechanical Lace (SS Rod)	Mechanical Lace (POM Rod)
Minimal pitch diameter for driving sprockets	mm *tommer*	80.8 *3.18*	80.8 *3.18*	80.8 *3.18*
Minimal pitch diameter for idling sprockets	mm *tommer*	80.8 *3.18*	80.8 *3.18*	80.8 *3.18*
Minimal back-bending roller diameter for center drive configuration	mm *tommer*	100 *4*	100 *4*	100 *4*
Minimal diameter for belt support roller	mm *tommer*	75 *3*	75 *3*	75 *3*
Admissible tensile force per unit of width	N/mm *lbf/in*	6.0 *34*	5.5 *31*	4.0 *23*
Troughed installation suitable		Yes	No	No
X-Ray / Metal detectable material		Yes	Yes	Yes
Designed for metal detector transparency		No	No	No

All data are approximate values under standard climatic conditions: 23°C/73°F, 50% relative humidity (DIN 50005/ISO 554). Limited representative testing based on a standard configuration is carried out to estimate minimum pulley diameters. Please contact Habasit for specific guidance regarding non-standard applications, including, but not exclusively, when profiles or cleats are used, or if the belt working temperature is close to the limits listed in this document.

Chemical resistance
Link til informasjon om kemisk resistens https:/rims.habasit.com

Calculations
Please ask your local Habasit partner to calculate your needs for you and receive the best advise specially suited for your application.

Cleandrive Postitive Drive Belts
CD.P50-A-MC+M

Recommendation
See Engineering Manual

Store spare belts in a cool and dry place and if possible in their original packaging. Protect spare belts from sunlight/UV-radiation/dust/dirt! Check Link for Storage requirements:
"https://tdm.habasit.com/pds/en-us/Storage%20of%20Habasit%20material.pdf"

This product has not been tested according to ATEX standards (atmospheres with explosion risk - ATEX 95 regulation or EU directive 2014/34/EU) and therefore is subject to user's analysis in the respective environment



Sprockets
Habasit® Cleandrive series

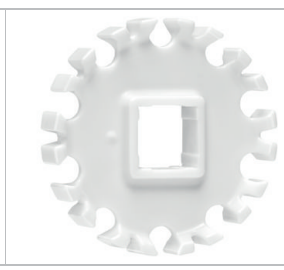

Sprockets
Habasit® Cleandrive HyCLEAN series

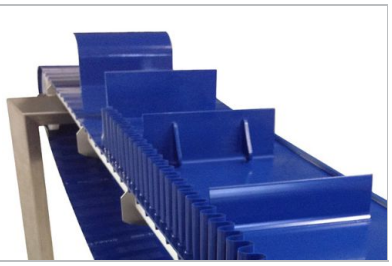

Profiles
Longitudinal and transversal profiles

Group	Cleandrive Positive Drive Cleandrive Belt Series CD50
Del nummer	H950047773

Ansvarsfraskrivelse
Ansvarsfraskrivelse for produktanvendelse (gælder for ALLE Habasit produkter og nævnt på alle produktdatablade)
Denne ansvarsfraskrivelse gælder for Habasit og firmaer, som er tilknyttet os, samt vores chefer, ansatte, agenter og entreprenører (herefter fælles benævnt HABASIT) for de produkter som omfattes af denne tekst (herefter benævnt produkter). SIKKERHEDSADVARSLER SKAL LÆSES OMHYGGELIGT OG ALLE ANBEFALEDE SIKKERHEDSFORSKRIFTER SKAL FØLGES STRENGT! Følg advarslerne som findes i dette dokument, i Habasits kataloger og i installationsanvisninger og håndbøger. Alle indikationer og al information om applicering, anvendelse og ydelse af produktet er anbefalinger, som kan anses for værende pålidelige, men de er ingen fremstilling, garanti eller ansvarsforpligtigelse med hensyn til fuldstændighed, tolerancer eller egnethed til et bestemt formål. Denne information bygger på laboratoriearbejde med mindre testudstyr, kørt ved normaldrift, hvilket indebærer at den ikke nødvendigvis matcher produktydelsen ved industriel anvendelse. Ny viden og erfaring kan medføre modificeringer og ændringer inden for en kort periode og uden forudgående varsel.
DISSE PRODUKTER OMFATTES AF HABASITS UDTRYKTE GARANTI, SOM ER DEN ENESTE GÆLDENDE GARANTI OG ERSTATTER ALLE ANDRE EVENTUELLE GARANTIER, UDTRYKTE ELLER UNDERFORSTÅEDE. HABASIT FRASKRIVER SIG ALT ANSVAR FOR ALLE ANDRE GARANTIER, UDTRYKTE ELLER UNDERFORSTÅEDE, INKLUSIVE, DOG UDEN AT BEGRÆNSES DERTIL, UNDERFORSTÅEDE GARANTIER OM SALGBARHED, EGNETHED TIL ET BESTEMT FORMÅL, AT PRODUKTERNE IKKE STRIDER MOD NOGLE REGLER, SAMT GARANTIER SOM FØLGE AF AFTALE, ANVENDELSE ELLER HANDEL. DETTE FORBEHOLD GÆLDER I DEN UDSTRÆKNING SOM LOVEN TILLADER. DA FORUDSÆTNINGERNE FOR ANVENDELSE ER UDEN FOR HABASITS KONTROL, KAN VI IKKE TAGE NOGET ANSVAR FOR DE NÆVNTE PRODUKTERS EGNETHED ELLER PROCESTILPASNING. DETTE FORBEHOLD GÆLDER OGSÅ FOR INDIKATIONER FRA PROCESRESULTATER OG OUTPUT.