# Cleandrive Friction Drive Belts
# CD.F20-A-UW+M

**Main industry segments**
Dairy (incl. cheese), Fruit, Poultry, Red meat, Vegetables

**Special features**
Abrasion resistant on both sides, Bi-directional suitable, Easy cleanability



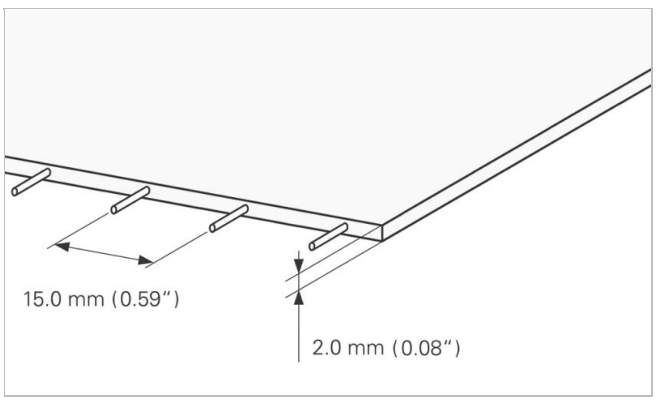


| Product Construction / Design | |
|---|---|
| Material | Thermoplastic polyurethane (TPU) |
| Farve | White |
| Conveying side surface | Matt |
| Conveying side property | Medium-adhesive |
| Traction layer (material) | Aramid cords |
| Pulley side surface | Glossy |
| Pulley side property | Adhesive |

| Product characteristics | |
|---|---|
| Antistatically equipped | No |
| Conveying side conductive surface acc. EN ISO | No |
| Slider bed suitable | Yes |
| Carrying rollers suitable | Yes |
| UV-C suitable | No |
| Laser markable | Yes |
| Flammability | No specific flammability prevention property |
| Food suitability, EU conformance | Yes - Check Document of Compliance (DoC) in our Portal |
| Food suitability, FDA conformance | Yes - Check Document of Compliance (DoC) in our Portal |
| Other conformance/approval | Japanese Food Regulation (MHLW Notification No. 370) |

# Cleandrive Friction Drive Belts
# CD.F20-A-UW+M

| Technical data | | | | |
|---|---|---|---|---|
| Hardness | 95 | Shore A | | |
| Thickness of belt | 2.0 | mm | *0.079* | *tommer* |
| Distance between cords | 15 | mm | *0.59* | *tommer* |
| Mass of belt (belt weight) | 2.3 | kg/m² | *0.471* | *lb/sqft* |
| Tensile force for 1% elongation (k1% static) per unit of width (Habasit standard SOP3-155) | 8.0 | N/mm | *46* | *lbf/in* |
| Tensile force for 1% elongation after relaxation (k1% relaxed) per unit of width (Habasit Standard SOP3-155 / EN ISO 21181) | 7.0 | N/mm | *40* | *lbf/in* |
| Min. operating temperature admissible (continuous) | -20 | °C | *-4* | *°F* |
| Max. operating temperature admissible (continuous) | 80 | °C | *176* | *°F* |
| Coefficient of friction (pulley side / steel driving pulley) | 0.50 | - | | |
| Coefficient of friction (pulley side / PE wearstrips) | 0.50 | - | | |
| Coefficient of friction (pulley side / stainless steel slider bed) | 0.80 | - | | |
| Coefficient of friction (conveying side / PE wearstrips) | 0.40 | - | | |
| Coefficient of friction (pulley side / PE sliding support) | 0.40 | - | | |
| Minimal width of belt | 150 | mm | *6* | *tommer* |
| Seamless manufacturing width | 1829 | mm | *72.01* | *tommer* |

### Joining related properties

| Joining method | |
|---|---|
| Quickmelt | Master joining method for standard applications |

Link to JDS:

| Joining method | | Quickmelt |
|---|---|---|
| Pulley diameter (minimum) | mm<br>*tommer* | 25<br>*0.98* |
| Pulley diameter minimum with counter flection | mm<br>*tommer* | 25<br>*0.98* |
| Admissible tensile force per unit of width | N/mm<br>*lbf/in* | 6.0<br>*34* |
| Admissible tensile force per unit of width at max. operating temperature | N/mm<br>*lbf/in* | 3.0<br>*17* |
| Troughed installation suitable | | Yes |
| X-Ray / Metal detectable material | | No |
| Designed for metal detector transparency | | Yes |

*All data are approximate values under standard climatic conditions: 23°C/73°F, 50% relative humidity (DIN 50005/ISO 554). Limited representative testing based on a standard configuration is carried out to estimate minimum pulley diameters. Please contact Habasit for specific guidance regarding non-standard applications, including, but not exclusively, when profiles or cleats are used, or if the belt working temperature is close to the limits listed in this document.*

### Chemical resistance
Link til informasjon om kemisk resistens https:/rims.habasit.com

### Calculations
For most applications calculation is not required. Should you still need a calculation: please ask Habasit.

# Cleandrive Friction Drive Belts
# CD.F20-A-UW+M

**Recommendation**

Install the slack belt and tension until running perfectly under the full belt load, Recommended initial elongation 0.1 - 0.2%

Store spare belts in a cool and dry place and if possible in their original packaging. Protect spare belts from sunlight/UV-radiation/dust/dirt! Check Link for Storage requirements: "https://tdm.habasit.com/pds/en-us/Storage%20of%20Habasit%20material.pdf"

This product has not been tested according to ATEX standards (atmospheres with explosion risk - ATEX 95 regulation or EU directive 2014/34/EU) and therefore is subject to user's analysis in the respective environment

| | |
|---|---|
| Group | Cleandrive Friction Drive |
| | Cleandrive Friction Drive Belts |
| Del nummer | H950047682 |

**Ansvarsfraskrivelse**
**Ansvarsfraskrivelse for produktanvendelse (gælder for ALLE Habasit produkter og nævnt på alle produktdatablade)**
Denne ansvarsfraskrivelse gælder for Habasit og firmaer, som er tilknyttet os, samt vores chefer, ansatte, agenter og entreprenører (herefter fælles benævnt HABASIT) for de produkter som omfattes af denne tekst (herefter benævnt produkter). SIKKERHEDSADVARSLER SKAL LÆSES OMHYGGELIGT OG ALLE ANBEFALEDE SIKKERHEDSFORSKRIFTER SKAL FØLGES STRENGT! Følg advarslerne som findes i dette dokument, i Habasits kataloger og i installationsanvisninger og håndbøger. Alle indikationer og al information om applicering, anvendelse og ydelse af produktet er anbefalinger, som kan anses for værende pålidelige, men de er ingen fremstilling, garanti eller ansvarsforpligtigelse med hensyn til fuldstændighed, tolerancer eller egnethed til et bestemt formål. Denne information bygger på laboratoriearbejde med mindre testudstyr, kørt ved normaldrift, hvilket indebærer at den ikke nødvendigvis matcher produktydelsen ved industriel anvendelse. Ny viden og erfaring kan medføre modificeringer og ændringer inden for en kort periode og uden forudgående varsel.
DISSE PRODUKTER OMFATTES AF HABASITS UDTRYKTE GARANTI, SOM ER DEN ENESTE GÆLDENDE GARANTI OG ERSTATTER ALLE ANDRE EVENTUELLE GARANTIER, UDTRYKTE ELLER UNDERFORSTÅEDE. HABASIT FRASKRIVER SIG ALT ANSVAR FOR ALLE ANDRE GARANTIER, UDTRYKTE ELLER UNDERFORSTÅEDE, INKLUSIVE, DOG UDEN AT BEGRÆNSES DERTIL, UNDERFORSTÅEDE GARANTIER OM SALGBARHED, EGNETHED TIL ET BESTEMT FORMÅL, AT PRODUKTERNE IKKE STRIDER MOD NOGLE REGLER, SAMT GARANTIER SOM FØLGE AF AFTALE, ANVENDELSE ELLER HANDEL. DETTE FORBEHOLD GÆLDER I DEN UDSTRÆKNING SOM LOVEN TILLADER. DA FORUDSÆTNINGERNE FOR ANVENDELSE ER UDEN FOR HABASITS KONTROL, KAN VI IKKE TAGE NOGET ANSVAR FOR DE NÆVNTE PRODUKTERS EGNETHED ELLER PROCESTILPASNING. DETTE FORBEHOLD GÆLDER OGSÅ FOR INDIKATIONER FRA PROCESRESULTATER OG OUTPUT.