HabasitLINK®
Sprocket series M1000

M = Modular belts
Belt pitch
S = sprocket one-piece
Number of teeth
Shaft size
Shaft type: Q = square shaft; R = round shaft
Material: 6 = POM; 8 = PA

M	10	S	12	40	Q	6

Sprocket availability

Type	Number of teeth	Diam. of pitch Ø d_p		A_1		Hub width B_L		Square bore Q		Ø Round bore R		Standard material
		mm	*inch*	mm	*inch*	mm	*inch*	mm	*inch*	mm	*inch*	-
S-C1	10	41.1	*1.6*	17.5	*0.69*	25	*1*			20	*0.75*	POM
S-C1	15	61.1	*2.4*	27.7	*1.09*	25	*1*	25	*1*	30	*1.25*	POM
S-C1	24	97.3	*3.8*	46.1	*1.81*	25	*1*	40	*1.5*	30	*1.25*	POM

S: molded sprockets; S-C1: machined sprockets. Other sprocket and hub sizes on request.
Key ways for round bore shape follow European standards for metric sizes and US standards for imperial sizes. For detailed dimensions see table in the Engineering Guide chapter Design Guide.
Other materials available on request.

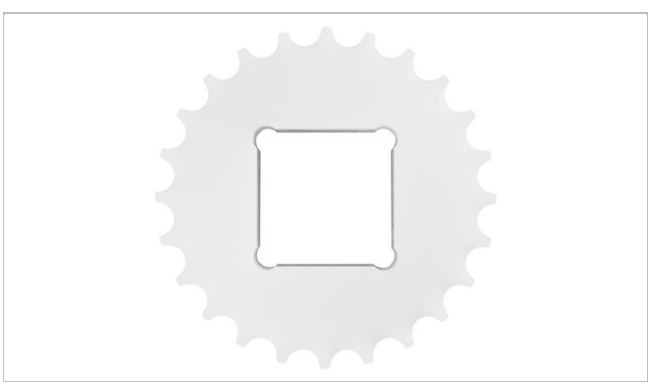

Sprocket arrangement

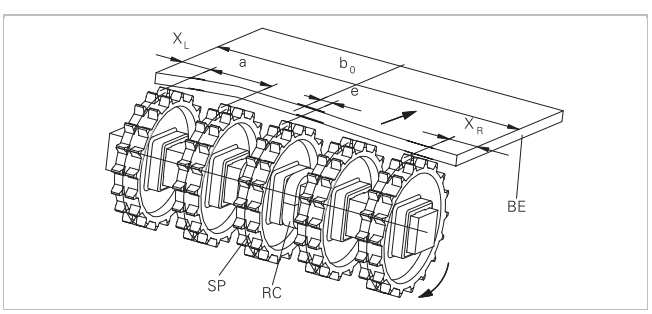

BE Belt
RC Retainer
SP Sprocket
b_0 belt width

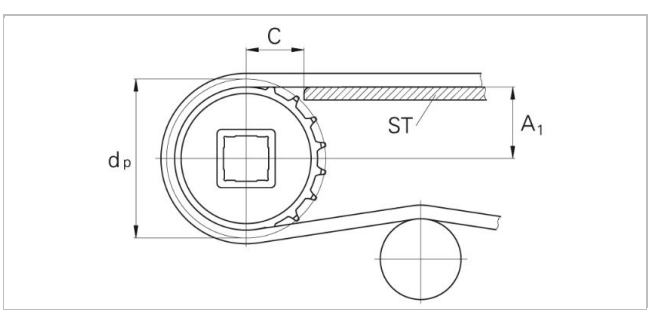

The distance **C** between the sprocket axis and the slider support **ST** is minimal 28 mm *(1.1")*.

Wearstrips
Between driving shaft and idling sprockets or rollers the belt is carried by a slider support furnished with longitudinal wear strips (SL) from UHMW Polyethylene or other suitable material.

Sprocket positioning

For correct positioning of the center sprocket divide the belt width by the link increment. The rounded result will be an even or an odd number. These numbers are the criteria for offset or no offset, see table.

Belt type	Sprocket spacing a		Sprocket edge distance		Criteria for center sprocket position	Result of formula (rounded)	Offset e	Remarks
	minimal mm *inch*	**maximal** mm *inch*	X_L mm *inch*	X_R mm *inch*	mm *inch*		mm *inch*	Offset to which side
M1065	76.2 *3*	152.4 *6*	25 *1*	25 *1*	b_0 / 50.8 *b_0 / 2*	even number (2, 4 ...)	0	right or left side
						odd number (3, 5 ...)	0	right or left side

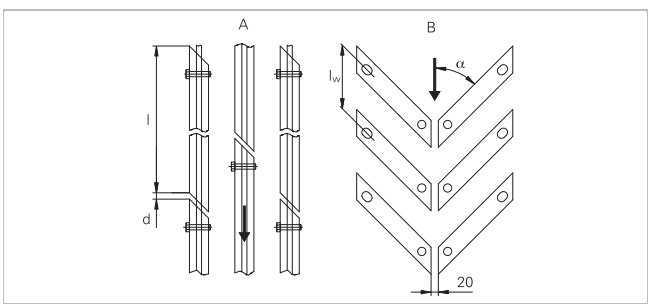

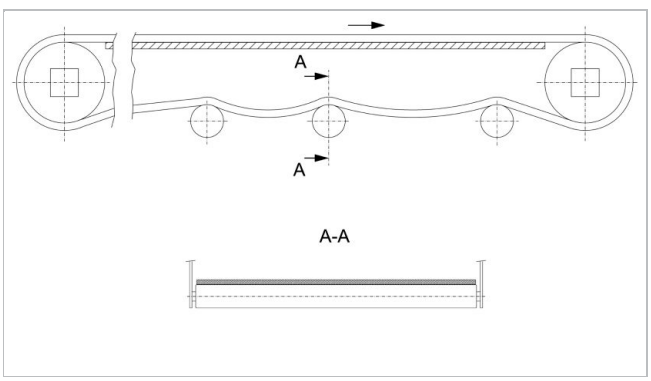

For belt support rollers over entire belt width are preferred

Support arrangement

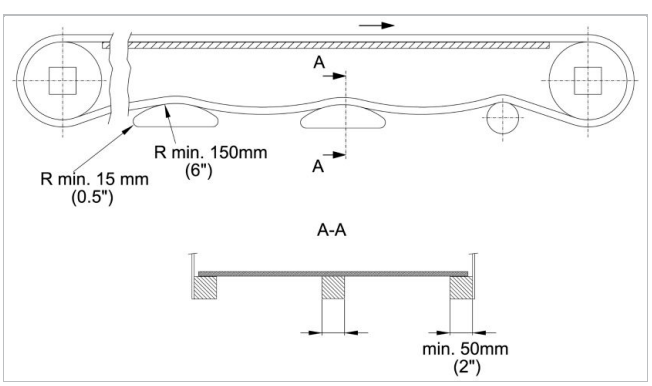

Static shoes need to support the belt edge min. 40 mm *(1.5")*

声明
产品应用声明(适用于所有哈伯斯特 Habasit 产品及所有产品资料表上提到的)
"这个声明是由哈伯斯特 Habasit 及代表其附属公司，董事，雇员，代理人和承包商(以下统称"HABASIT")及与本文提到的产品("产品")关联。请应仔细阅读安全注意事项，任何建议的安全警告必须严格遵守！请参考此哈伯斯特 Habasit 目录内的"安全警告"，并参考相关安装和操作手册。所有关于应用、产品的使用、产品的性能的指示及数据，皆是尽义务和关注性的建议，只为了推荐用途，对于它们的准确性、其完整性及在特定情况下的适用性，均不可被视作陈述、保证、或承诺。本文提供的数据只是基于实验室工作所在标准环境下使用小型测试工具运作取得，它们不一定与在工业运作中的产品表现相符合。新的知识及经验可能导致我们在短时间内为产品做出必须的修正及变更，我们保留在不做任何通知的情况下，修改及变更相关资料数据的权利。除非HABASIT明确地保证(此保证具独立性、排他性，并取代所有其他的、明示或暗示的保证)，否则产品是如购买的实物一样。HABASIT否认所有其他保证，包括明示或暗示但不限于适销性，针对特定用途的适用性，非侵权，或从处理或使用过程中产生的保证，或贸易惯例，所有这一切，兹排除在适用法律允许的范围内。由于产品的使用情况并非在瑞士哈伯斯特及其附属公司可控制的范围内，我们无法对产品的适用性、可靠性、其工作能力、制程结果、产量、制品、潜在缺点、损害、相因而生的损害及深远的损害负任何责任。注：以上一切声明以英文版本的实际内容为准。